800.433.4047 | tellmfg.com

Date

Name

Company

Phone

Fax

Email

P.O. Number

Ship To:

Estimated Freight Cost:

Price (plus shipping)

I approve this order to be made to the specifications listed on this form:

Signature

Date

Please check each frame and component part to assure that your order is properly filled. Tell Manufacturing will correct any error on our part immediately. Final responsibility that the materials purchased is correct, will be with the purchaser. If the material is sent to and/or installed wrong at the job site, the purchaser accepts all responsibility.

DOOR WORK ORDER

PRICES FIRM FOR 30 DAYS

DOOR NO.: TELL PART NO.:

QUANTITY: _____ GAGE: _____ HAND: _____ MATERIAL: GALVANNEAL

ASTRAGAL: ☒ Yes ☐ No *Style:* Z with ASA and Flushbolt Prep

DOOR SIZE *Width x Height x Thickness:*

NOMINAL: _____ X _____ X _____

ACTUAL: _____ X _____ X _____

UNDERCUT: _____

HARDWARE PREP

☐ 161 ☐ DEADLOCK
☐ FLUSH BOLTS ☐ EXIT
☐ NO LOCK ☐ ASA
☐ MORTISE

LOCK TEMPLATE: _____

EXIT TEMPLATE: _____

NOTE: If **TELL** is to prep, customer must provide template.

DOOR TYPE

LABEL:

☒ PS - Polystyrene Core
☐ PU - Polyurethane Core (Non UL)

UL FIRE RATING

☒ 20 MIN
☐ 60 MIN
☐ 90 MIN
☐ 3 HR

HINGE PREP

Manufacturer's Locations:

HINGES: QTY: _____ Size: _____

☐ STANDARD WT. ☐ HEAVY WT. ☐ SPRING
☐ NO HINGE PREP

DOOR COLOR

PRIME FINISHES:

☐ BRONZE PRIME
☐ WHITE PRIME
☒ GRAY PRIME
☐ OFF WHITE
☐ LIGHT GRAY
☐ BRIGHT WHITE
☐ CUSTOM

LITE KIT AND LOUVERS

Width x Height x Thickness:

CUTOUT: _____ X _____ X _____

LOUVER: _____ X _____ X _____

NOTE: Elevation at right

ACTUAL DOOR DIMENSIONS AND HARDWARE LOCATIONS

W. WIDTH_____ **H.** HEIGHT _____

A. HINGE 1 _____

B. HINGE 2 _____

C. HINGE 3 _____

(if necessary) **D.** HINGE 4 _____

E. LOCK _____

F. DEADBOLT CTC* _____

G. LOCK BACKSET _____

LITE KIT AND LOUVERS:

X. CUTOUT FROM TOP _____

Y. CUTOUT FROM SIDE _____

NOTE:

- Hinges are measured from the top of the door to the top of the hinge cutouts.
- Lock cutout is measured from top of door to centerline of lock cutout.

*Standard deadbolt CTC is 7-3/4".

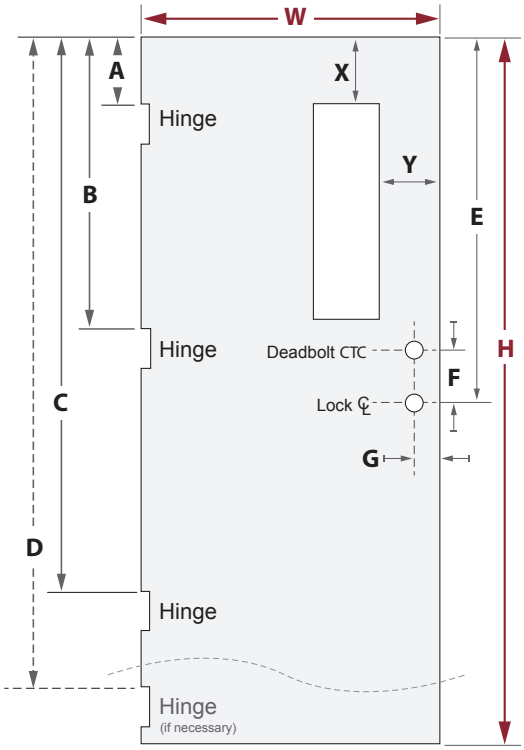

Maximum Size HM Door: 3'0" x 9'0" 18GA / 4'0" x 8'0" 18GA
Maximum Size HM Frame: Custom as approved per order
Maximum UL Size HM Door: Single 4'0" x 8'0" / Double 8'0" x 7'2" (pair of doors)
Maximum UL Size HM Frame: Welded – Single 4'0" x 10'0" / Double 8'0" x 10'0"
KD – Single 3'6" x 9'0" / Double 7'0" x 9'0"

SPECIAL INSTRUCTIONS/NOTES FOR HARDWARE PREP

(Lock prep, flush bolt, exit device type, etc.)